

PTZOptics PT-JOY-G4

Technical Specifications

Technical Specs

Model Information

Feature	Value
Official SKU	`PT-JOY-G4`
Model Name	`PT-JOY-G4`

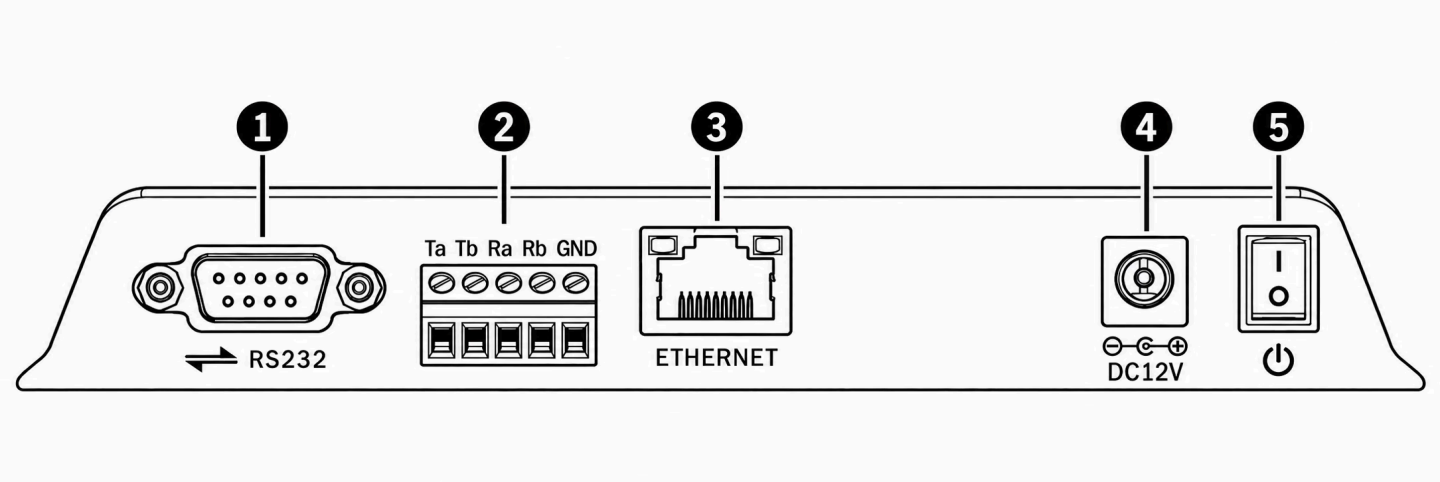

PT-JOY-G4 Connection List

1. RS-232 Output
2. RS-485 Interface
3. LAN
4. DC 12V Power
5. Power Switch

General Specifications

Feature	Specification
Protocol	- **PTZOptics VISCA** and **VISCA over IP** - **PELCO-D** and **PELCO-P** via Serial Ports - Limited **Sony VISCA** and **VISCA over IP** support

Feature	Specification
	- **Limited ONVIF** support - **WebSockets**
Baud Rate	1200 to 19200 bps
Maximum Cameras	253 channels / cameras
Maximum Recommended Distance	Ethernet: 328 feet / 100 Meters
Maximum Recommended Distance	RS-232: 50 feet / 15 Meters
Maximum Recommended Distance	RS-485: 3,937 feet / 1200 Meters
Maximum Recommended Distance	RS-422: 50 feet / 15 Meters

Connections

Feature	Specification
Power Connector	12DC Power Connection
Power Requirements	12V DC
Power Consumption	6 Watts

Communication Interface

- RS-232 Control Connection
- RS-422 / RS-485 Control Connection
- Ethernet / RJ-45 (PoE) Network Connection
- Supports 802.3af PoE power
- Network: NIC (TCP and UDP)
- Serial/Analog: RS-232 Full Duplex, RS-485 Semi Duplex, RS-422 Full Duplex

Physical Specifications

Feature	Specification
USB 2.0 Interface	USB 2.0 Service Port (Update Firmware, Import Config, Export Config) DC12V Power required to activate.
Product Material	Aluminum
Dimensions (L x W x H)	9.25” L x 11.938” W x 4.25” H; 234mm L x 303mm W x 107.95mm H
Weight	4.45 lbs / 2.02 kg
Box Dimensions (L x W x H)	10.75” L x 14.2” W x 5.81” H; 273.05mm L x 360.36mm W x 147.64mm H
Box Weight	6.75 lbs / 3.06 kg
Operating Environment	Indoor
Operating Temperature	14° F ~ 122° F (-10° C ~ +50° C)
Operating Humidity	10% ~ 90% (non condensation)
Warranty	2 Year Manufacturer Warranty

Certifications

This joystick has been tested and certified for the standards shown below:

- FCC Class B - Tested under FCC 47 CFR Part 15 Subpart B, Class (sDoC), ANSI C63.4 -2014
- CE - Tested under EMC Directive 2014/30/EU
- EN 55032: 2015+A11:2020
- EN 55035:2017+A11:2020
- EN IEC 61000-3-2:2019
- EN 61000-3-3:2013/A1:2019
- RoHS - Tested under RoHS Directive 2011/65/EU