

PTZOptics Power Link

Technical Specifications

Technical Specs

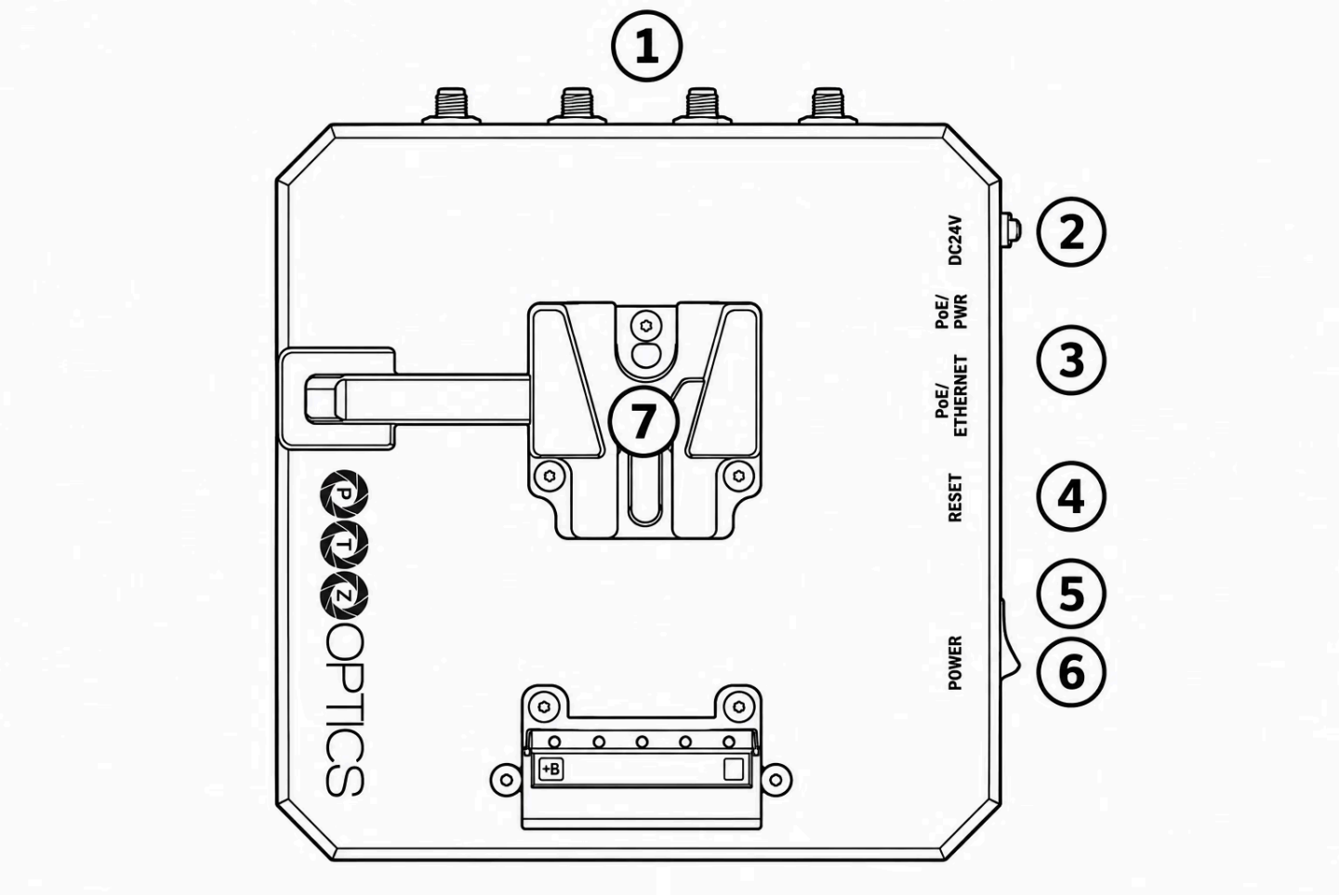

Connections

1. 4 x Antenna connectors
2. DC 24V Connection
3. Gigabit RJ45 port (optional PoE+ output)
4. Reset button
5. Status LED indicators
6. Power Switch
7. V-Mount battery plate

In the Box

- Power adapter and cable
- Power Link
- Universal DC24V power supply
- 4 antennas
- V-Mount battery (not included)

Transmission

Feature	Specification
Antennas	`4x 5 dBi high-gain antennas`
Wireless Standard	`IEEE 802.11ax/ac/a/b/g/n`
Transmission Rate	`574 Mbps on 2.4 GHz / 2400 Mbps on 5.8 GHz`
Receiver Sensitivity	`-98 dBm`
Operating Frequencies	`2.412-2.472 GHz / 5.180-5.825 GHz`
Channel Bandwidth	`20/40/80/160 MHz, auto`
Encryption	`WPA-PSK / WPA2-PSK / WPA/WPA2`
Wi-Fi	`Wi-Fi 6`

Physical

Feature	Specification
Physical Ports	`Gigabit RJ45 port (optional PoE+ output), 24V DC port, V-Mount battery plate`
Case	`Hardened aluminum`

Feature	Specification
PoE+ Port Standard	`Up to IEEE 802.3at`
Indicators	`PWR, PoE+ output status`
Switch	`On and Off`
Mounting	`1/4"-20 mounting points`
Operating Temperature	`-10°C to 50°C`
Dimensions with Antennas	`7.01" L x 5.22" W x 7.43" H` / `178.05mm L x 132.59mm W x 188.72mm H`
Dimensions without Antennas	`5.83" L x 5.22" W x 1.78" H` / `148.08mm L x 132.59mm W x 45.21mm H`
Weight	`1.55 lb` / `0.70 kg`